SEPARATIONS

Flue-Gas Carbon Capture on Carbonaceous Sorbents: Toward a Low-Cost Multifunctional Carbon Filter for "Green" Energy Producers†

Maciej Radosz,* Xudong Hu, Kaspars Krutkramelis, and Youqing Shen

Soft Materials Laboratory, Department of Chemical and Petroleum Engineering, University of Wyoming, Laramie, Wyoming 82071

A low-pressure Carbon Filter Process (patent pending) is proposed to capture carbon dioxide (CO_2) from flue gas. This filter is filled with a low-cost carbonaceous sorbent, such as activated carbon or charcoal, which has a high affinity (and, hence, high capacity) to CO_2 but not to nitrogen (N_2). This, in turn, leads to a high CO_2/N_2 selectivity, especially at low pressures. The Carbon Filter Process proposed in this work can recover at least 90% of flue-gas CO_2 of 90%+ purity at a fraction of the cost normally associated with the conventional amine absorption process. The Carbon Filter Process requires neither expensive materials nor flue-gas compression or refrigeration, and it is easy to heat integrate with an existing or grassroots power plant without affecting the cost of the produced electricity too much. An abundant supply of low-cost CO_2 from electricity producers is good news for enhanced oil recovery (EOR) and enhanced coal-bed methane recovery (ECBMR) operators, because it will lead to higher oil and gas recovery rates in an environmentally sensitive manner. A CO_2-rich mixture that contains some nitrogen is much less expensive to separate from flue-gas than pure CO_2; therefore, mixed CO_2/N_2-EOR and CO_2/N_2-ECBMR methods are proposed to maximize the overall carbon capture and utilization efficiency.

Introduction

This work is motivated by the need for inexpensive carbon-capture technology for combustion-based power plants. Such power plants produce electricity by converting coal or natural gas to carbon dioxide (CO_2), which is normally vented as an 11%−12% component of flue gas that contains a balance of nitrogen and other minor components. Separating CO_2 from such a flue-gas mixture poses no special technical problems for the known absorption, pressure-swing adsorption (PSA), and membrane technologies. However, these technologies have a tendency to be expensive for two principal reasons: the hot flue gas is produced at low pressure and the separated component (CO_2) is highly dilute with an inert component (nitrogen).

This suggests a need for compression, which is very expensive, because one must compress the entire flue gas mixture with plenty of inert nitrogen in it, for example, to increase the CO_2 solubility in an amine or other solvent solution, to increase its sorption in pressure-swing adsorption (PSA), or to create a driving force for its transport across the membrane. All these absorption, adsorption, and membrane approaches have been well-documented (see, for example, the reported work of Herzog and Drake,[1] Mimura et al.,[2] White et al.,[3] and Aaron and Tsouris[4]). The main directions of research aimed at future innovations are focused on developing novel CO_2 separation materials, such as ionic liquids,[5] ionic polymers,[6−8] and nano-silica and nanotube composites,[9−11] just to mention recent examples from our laboratory; however, this is an active field of research in many other laboratories.

One of the more popular research directions has been PSA using zeolite X13 and activated carbon, but only for sorption at elevated pressures (at least 2 bar). Zeolite 13X has higher capacity, but activated carbon is less expensive than zeolite and insensitive to moisture.[20−26] Its surface properties can vary considerably, but its approximate pure-CO_2 sorption capacity can be as high as 10 wt % and its carbon dioxide/nitrogen (CO_2/N_2) selectivity is on the order of 10, at 1 bar and 25 °C.[12−15] Other types of carbonaceous sorbents, such as charcoal and coal, have been studied in a different CO_2 context;[16−19] however, they have not been explored or proposed for carbon capture from flue gas yet. For example, in the context of displacing coal-bed methane with CO_2, it has been shown that virgin coal has a higher capacity for CO_2 than it does for methane,[19] again, only at elevated pressures. However, there are no references to low-pressure flue-gas CO_2 sorption coupled with thermal regeneration.

Although a typical destination of the captured CO_2 is commonly envisioned to be some form of passive geologic storage or other storage type, this work is also motivated by a vision of utilizing the captured CO_2 to displace valuable oil and coal-bed methane stranded in mature reservoirs, as illustrated in Figure 1, before storing it permanently in spent reservoirs. Such a CO_2-driven displacement is referred to as enhanced oil recovery (EOR) and enhanced coal-bed methane recovery (ECBMR). The advantage of CO_2-EOR over a conventional water displacement is that, generally, CO_2 is miscible with oil, which leads to a much higher oil recovery. The conventional coal-bed methane recovery calls for the release of massive quantities of environmentally objectionable water, to reduce the

* To whom correspodence should be addressed. Tel.: 307-766-4926. Fax: 307-766-6777. E-mail: radosz@uwyo.edu.

† Preliminary accounts of this work have been presented at the Sixth Annual Conference on Carbon Capture and Sequestration (May 2007, Pittsburgh, PA), the Annual Meeting of the American Institute of Chemical Engineers (November 2007), and other meetings. Updates on this ongoing project, including material enhancements, pilot data, and field tests, can be obtain from the corresponding author.

10.1021/ie0707974 CCC: $40.75 © 2008 American Chemical Society
Published on Web 04/29/2008

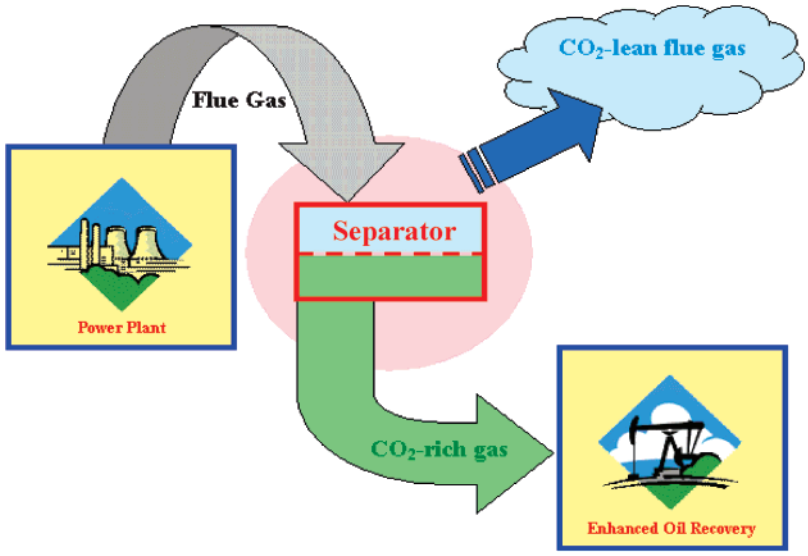

Figure 1. Vision of carbon capture (in a separator) from a coal- or gas-fired power plant for utilization in enhanced oil recovery (EOR) or enhanced coal-bed methane recovery (ECBMR) and storage in spent oil and gas reservoirs and saline aquifers.

reservoir pressure that traps methane in coal seams. A CO_2-ECBMR alternative is attractive because it can produce more methane in an environmentally sensitive manner, without much of the groundwater byproduct. Both CO_2-EOR and CO_2-ECBMR are examples of producing oil and methane energy that is not only "green" but also more plentiful and cost-effective. However, both require a plentiful supply of "green" CO_2 from power plants, which hinges on new cost-effective capture technologies.

The goal of this work is to explore a low-pressure Carbon Filter Process technology (patent pending), that is, an inline flue-gas filter that captures CO_2 on a carbonaceous sorbent, and, specifically, to evaluate the capacity and CO_2/N_2 selectivity of model activated carbon, model charcoal, and model virgin coal, to scale them up to a Carbon Filter Process that can be integrated with an existing or grassroots coal power plant, and to estimate the cost of recovered CO_2, relative to the conventional monoethanolamine (MEA) technology. While such a Carbon Filter Process is likely to be multifunctional in that it can capture the non-carbon pollutants as well, the model flue gas used in this work consists of CO_2 and nitrogen only.

A Base-Case Flue Gas

Wyoming is blessed with rich deposits of coal that is commonly used to produce inexpensive electricity. Therefore, a small-to-average-sized Wyoming power plant is targeted for this work as an example to illustrate the carbon capture opportunities; however, the analysis and conclusions presented here are universally applicable to—and, in fact, explored for—any combustion-based power plant. A target plant should be located close to large oil-producing fields that can use CO_2 to displace more oil from their mature reservoirs. Also, for an easy reference and comparison, such a plant should produce about as much CO_2 as the very large natural-gas plant owned and operated by ExxonMobil in LaBarge, WY, which currently supplies the local EOR operators with CO_2. Data for a Gillette power plant called Wyodak that meets these criteria are shown in Table 1, along with data for other Wyoming power plants and their CO_2 production. The total CO_2 production from these power plants alone is ~52 million tons of CO_2 per year, which corresponds to slightly more than 100 tons (~225 000 lbs) per capita. The Wyodak flue gas is characterized in Table 2.

Table 1. Wyoming Coal-Fired Power Plants[a]

Plant	Town	Capacity (MW)	CO_2 Production in 2002 (tons)
Jim Bridger	Rock Springs	2120	18 576 558
Laramie River	Wheatland	1650	14 442 863
Dave Johnson	Glenrock	762	7 362 207
Naughton	Kemmerer	700	6 012 586
Wyodak	***Gillette***	***335***	***3 519 336***
Neil Simpson II	Gillette	114	1 264 726
Wygen 1	Gillette	90	~900 000
Total		5771	52 078 276

[a] Data taken from ref 27.

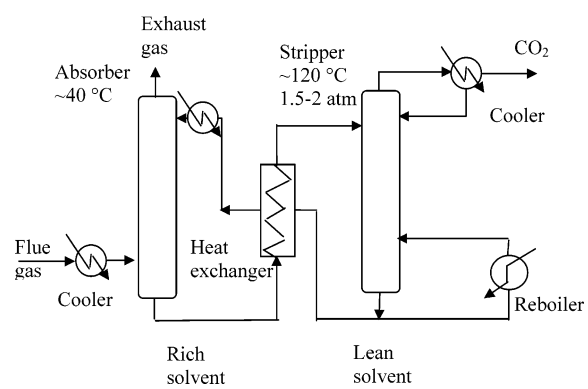

Figure 2. Monoethanolamine (MEA) absorption benchmark process.

Amine Absorption: A Reference for Technical and Economic Approximations

The amine absorption process shown in Figure 2 is known to be effective for separating CO_2 from mixtures of natural gas and flue gas,[3,27] and, hence, it is used in this work as a point of reference for alternative CO_2 separation processes. In this benchmark process, the feed is the Wyodak flue-gas mixture characterized in Table 1 and the solvent is a weakly basic aqueous monoethanolamine (MEA) solution. While the CO_2-containing flue gas counter-currently contacts the MEA solution in an absorber vessel at ~40−60 °C, CO_2 weakly bonds to the

Table 2. Wyodak Flue-Gas Volumetric Composition[a]

Parameter	Value
Flow Rate	488 m^3/s (STP)
Temperature at Stack	85 °C
Composition	
N_2	67%
CO_2	11.8%
O_2	12%
H_2O	8%
CO	300 ppm
SO_2	180 ppm
NO_x	150 ppm

[a] Data taken from ref 27.

MEA amine, while the other gas components flow through the solution without retention, which is the basis for the CO_2 selectivity. The CO_2-rich bottoms stream is heated to 100−140 °C to break the CO_2−amine bond and, hence, release CO_2 in a stripper column. The CO_2-lean bottoms stream from the stripper column is cooled before it is recycled to the absorber. The goal of this separation is a minimum of 90% of the CO_2 in the overhead stream from the stripper column and a minimum of 90% recovery (no more than 10% of CO_2 originally present in the flue gas is vented with the absorber overhead stream).

First-pass technical and economic approximations for this and all other process examples cited in this work are consistent with those reported in one of the subsequent sections. No attempt is made to optimize the process with the most-accurate data, because the purpose is to develop approximate but self-consistent cases that can be compared to the benchmark amine process. For such preliminary approximations, the cost of recovered CO_2 using the MEA process shown in Figure 2 is approximately \$47/ton, before compression, which is slightly higher than, but in realistic agreement with, the commonly quoted data (\$40−\$50/ton of compressed CO_2) for an optimized MEA process. As usual, the cost of steam to heat the solvent is the most significant operating cost. Despite the amine volatility losses and its corrosiveness, this is a convenient benchmark for comparing alternative processes, because it is well-established and it continues to be a subject of extensive research.[28,29]

Ionic Liquid Absorption is Slow

One of the early leads in this work was CO_2 absorption in ionic liquids, which are known to be selective for CO_2. However, the CO_2 sorption and desorption rates were observed to be very low in the ionic liquids studied in this work.[6] Therefore, the ionic liquid absorption option has been abandoned. Instead, polymerized ionic liquids have been determined to be more attractive as solid materials for CO_2 membranes and sorbents, as documented in other papers.[7,8]

Pressure-Induced Transport is Expensive for Membranes

An example of a CO_2-philic membrane-based alternative is shown in Figure 3, where the CO_2 driving force is due to a pressure difference between the permeate (ambient) and retentate (107 psi). From among the many membrane materials that are known to be selective for CO_2, relative to nitrogen, a recently synthesized membrane that was made of brominated poly-(phenylene oxide) (BPPO) impregnated with 30 wt % of 10-nm silica, is selected, because its permeability (∼800 barrer) and its CO_2/N_2 selectivity (∼23) place it above the Robeson line, as demonstrated by Hu et al.[11] This system can recover at least 90% of the CO_2 with a purity of 90%; however, it is costly.

There could be more-selective and more-permeable membranes, and perhaps more-efficient CO_2-permeation driving forces that minimize the need for compression.[58] However, this simple example highlights and illustrates the basic challenges for any CO_2-philic membrane system applicable to a flue gas, which are the need for multiple stages, the cost of compressing a large quantity of CO_2-lean feed and permeate streams, and the cost of the membrane material. Because no firm basis for estimating the cost of the BPPO nanocomposite is available at this time, the cost of recovered CO_2 is not reported here, except to say that, even for optimistic material cost assumptions, this cost is much higher than that of CO_2 from the amine process.

Zeolite Sorbents: Heat of Sorption, Moisture Sensitivity, and Material and Pressure Costs

An example of a zeolite-13X PSA process[13] is evaluated in this work for the Wyodak flue gas, again, without any attempt to optimize it, except to select preliminary conditions that make the recovery and purity targets technically feasible. A simplified diagram of PSA fixed-bed vessels alternating between the sorption and desorption modes is shown in Figure 4. In a first-pass economic evaluation, the sorption and desorption steps are assumed to be approximately isothermal, even though the CO_2 heat of sorption on zeolite is substantial enough to cause the sorption temperature to increase (as much as 50 °C or more).[30] It has been reported that the heat of CO_2 adsorption on zeolite is ∼30 kJ/mol,[56] which is ∼10 times higher than that on activated carbon (∼3 kJ/mol)[35] at the same temperature 25 °C and pressure 1 bar. Another drawback of the zeolite sorbent is its moisture sensitivity, which requires much higher (say, over 300 °C) drying temperatures than the minimum temperatures needed to remove CO_2 alone, which means extra recovery costs.

However, ignoring these drawbacks in a first-pass economic evaluation leads to a cost of recovered CO_2 that is approximately \$70/ton, which is less than the membrane-recovered CO_2, but is ∼40% more than the amine benchmark cost. The need to dry the zeolite will increase this cost. The main cost components are the steam cost, the compression cost, and the zeolite cost (\$33/lb).[27] A less-expensive sorbent, such as activated carbon (for example, \$1−\$2/lb),[59] can reduce the material cost, but compression will still be required, if it is used in a PSA mode.[31] Therefore, a PSA route is not evaluated further in this work.

Carbonaceous Sorbents: CO_2-Selective but Moisture Insensitive and Easy to Regenerate

Based on the amine, membrane, and PSA separations previously outlined, although there is room for improvement and plenty of work in progress, a preliminary conclusion is to explore alternative flue-gas carbon-capture approaches that require no upstream compression and utilize a low-cost CO_2-selective sorbent that is easy to regenerate. Ideally, such a sorbent should be relatively insensitive to moisture, but selective to other flue-gas pollutants, such as NO_x, SO_x, mercury, and arsenic, which would allow for a multifunctional sorbent. Some but not all carbon-rich (carbonaceous) materials, such as activated carbon, charcoal, other coal pyrolysis-derived materials, or even virgin coal, can satisfy these requirements[48−55] and, hence, become the focus of this work.

Four preliminary model carbon-rich materials have been selected for this study: Activated Carbon 1 and 2 (denoted as AC1 and AC2, respectively), Charcoal, and virgin bituminous coal (denoted as Coal). Their average particle diameter is ∼2 mm, except for AC1 (which is 1.6 mm), which is acceptable for the laboratory tests, but will have to be adjusted for commercial applications, to minimize the pressure drop due to a blower-induced flow of flue gas. Their surface properties and apparent densities are given in Table 3; materials for specific scale-up applications will have customized properties.

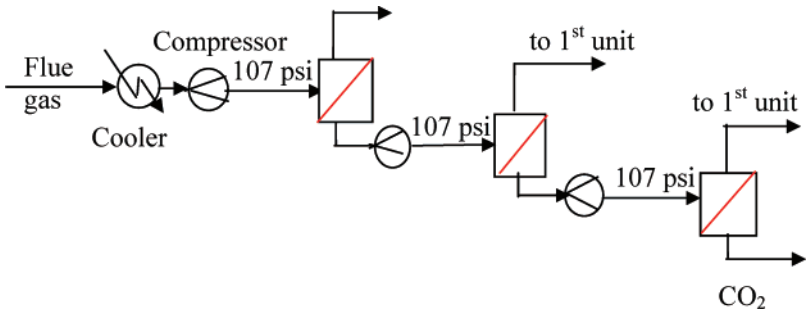

Figure 3. Schematic depiction of the brominated poly(phenylene oxide) (BPPO)−silica nanocomposite membrane.

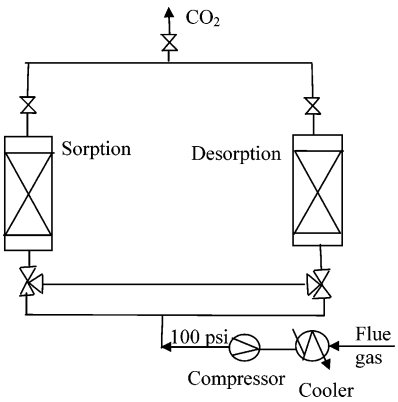

Figure 4. Schematic of zeolite 13X pressure swing adsorption (PSA); the sorption and desorption temperatures assumed to be near ambient and constant (although, in reality, the temperature is likely to increase during sorption, because of the high heat of CO_2 sorption on zeolite).[30,31]

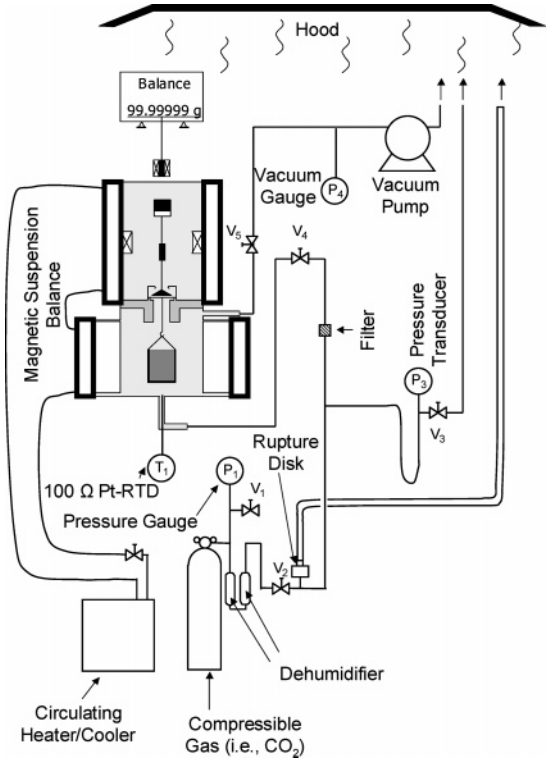

Figure 5. Magnetic suspension balance (MSB) used to characterize the sorption capacity and rate.

A Micromeritics Tristar instrument is used to characterize the Brunauer−Emmett−Teller (BET) surface area, and the Barrett−Joyner−Halenda (BJH) theory is used to characterize the pore volume and size.

The bulk prices of these materials may vary widely, but, for this study, we conservatively estimate an approximate cost to be \$1500/ton for AC1 and AC2, \$200/ton for Charcoal, and \$40/ton for Coal.

Sorption Capacity, Selectivity, Rate, and Thermal Stability

A Rubotherm magnetic-suspension balance (MSB), rated up to 500 bar and 150 °C, is used to measure the CO_2 and nitrogen sorption in these carbonaceous sorbents. The MSB consists of a sorption chamber that is used to expose the sample to a gas at elevated temperatures and pressures, and a microbalance, which is isolated from the sample and exists under ambient conditions. An electromagnet connected to the microbalance is adjusted so that a permanent magnet connected to a rod−basket assembly and located within the sorption chamber is kept suspended. Thus, the microbalance measures a weight that is proportional to the electromagnetic force, which keeps the rod−basket assembly in suspension. A detailed description of the MSB procedure used in this work was reported elsewhere.[32]

In brief, the MSB chamber shown in Figure 5 is flooded with CO_2 from a gas cylinder, which passes through two columns filled with phosphorus peroxide (P_2O_5). Its pressure is controlled with a cylinder regulator at low pressures (≤30 bar) or with a syringe pump (Isco, model 260D) at high pressures (>30 bar). After closing the sorption chamber the sorbent is degassed by evacuating the sorption chamber at 10^{-2} Torr until the weight measured by the microbalance remains unchanged over time. A heating circulator (Julabo, model F26ME) is used to control the temperature of the chamber, which is measured with a calibrated platinum resistance thermometer to an accuracy of ±0.5 °C. The mass of the sorbed CO_2 is determined from the increase of the electromagnetic force needed to maintain the sample in suspension. Eventually, when the sorbent reaches its sorption capacity, the weight of the sample stops increasing. Both the equilibrium sorption capacity and the sorption as a function of time are recorded.

The equilibrium sorption capacity results are tabulated in Appendix 1 and summarized in Figure 6 at four constant temperatures—25, 75, 110, and 130 °C—as a function of pressure, up to 10 bar. As expected, the sorption capacity increases as the pressure increases and the temperature decreases. The activated carbon capacity is somewhat higher than that of Charcoal, and much higher than that of coal, which correlates with the surface area and the degree and type of activation. For example, the acid-treated AC2 has a lower CO_2 sorption capacity than AC1 that has not been chemically modified and, hence, its surface should be neutral.

A more interesting trend emerges based on an ideal CO_2/N_2 sorption selectivity (defined here as the ratio of the pure-component sorption capacities), shown at 25 °C in Figure 7: increasing pressure substantially decreases the selectivity (it

Table 3. Properties of Carbonaceous Sorbents

Property	Value			
	AC1	AC2	Charcoal	Coal
Surface Area	809 m^2/g	553 m^2/g	135 m^2/g	>100 m^2/g (59)
Pore Volume	0.45 mL/g	0.59 mL/g		
Average Pore Size	4.21 nm	7.60 nm		
Surface Functional Group	carboxyl, phenolic hydroxyl	acid washed (chemically activated)		
Apparent Density	520 kg/m^3	390 kg/m^3	450 kg/m^3	640 kg/m^3

increases the nitrogen capacity to a far greater extent than it does the CO_2 capacity), which points to a low-pressure sorption advantage.

All carbonaceous materials studied in this work exhibit a rapid sorption rate. A representative sample for AC2 and Charcoal at 25 °C is shown in Figure 8. The small negative peak on the right-hand side is an equipment gas-injection artifact. A typical time needed to nearly saturate these materials with CO_2, to reach a point where the weight curves shown in Figure 8 start approaching an asymptote, is ∼3 min at 25 °C. This time increases as the temperature increases to ∼5−10 min at 75 °C and ∼10−12 min at 110 °C, with Charcoal being on the low side and AC being on the high side. As usual, it takes more time (at least 10 more minutes at lower temperatures) to reach complete saturation (toward the right-hand side of the sample charts in Figure 8). Generally, these results suggest short sorption cycles at low temperatures. One needs to remember that these data are for pure-component sorption, which will need to be verified with multicomponent sorption data. Also, desorption times were not determined accurately in this work; they should be comparable to the sorption times, and they are being evaluated along with multicomponent sorption breakthrough in a scale-up stage of this project.

The CO_2 sorption is found to be reproducibly reversible, which suggests a good stability and easy desorption. As shown in the upper part of Figure 9, 20 temperature cycles for AC1 and 5 temperature cycles for Charcoal between 25 °C and 130 °C do not seem to affect the sorption capacity much (typically within a 0.2 wt % band). The bottom part of Figure 9 shows an example of the complete equilibration time for AC1 and Charcoal. Although no special attempt was made to measure it very accurately, it stays within a 2-min band upon cycling.

The 12% CO_2-in-N_2 mixed-gas capacity was determined to be approximately one-fifth of the pure-CO_2 capacity (for example, ∼2.0 wt % for AC1 and ∼1.3 wt % for Charcoal). A more-complete account of the mixed-gas capacity and sorbate composition characterization is provided in the work by Krutkramelis et al.[60]

In summary, the sorption capacity data discussed in this section suggest a sorption step near ambient temperature and a desorption step at (below or above) 100−130 °C. The selectivity data suggest a low-pressure sorption step. The preliminary rate data suggest short sorption cycles. To evaluate such a low-pressure carbonaceous-sorbent carbon-capture filter (Carbon Filter for short), AC1 and Charcoal sorbents will be used as examples. These will be preliminary examples without an attempt to screen and optimize the sorbent and process conditions.

Carbon Filter Design Assumptions and Approximations

In all process cases in this work, the nominal CO_2 recovery target is 90% and its purity target is 90%, but both can be increased or decreased later, when subjected to process optimization. In a first-pass approximation of the flue gas described in Table 2, the Carbon Filter flue-gas feed is assumed to contain 12% CO_2, with the balance being nitrogen. At this stage, the other components are neglected, because they exhibit either low sorption capacity (for example, O_2[15,20] and H_2O[3,21,23]) or low (ppm-level) concentration (for example SO_x, NO_x, and mercury), and, hence, do not impact the CO_2 sorption much. The low O_2 sorption capacity has been confirmed in this work for AC1 and has been determined to be as low as that of nitrogen, that is, ∼1 wt % at 25 °C and 1 bar, which suggests that the CO_2/

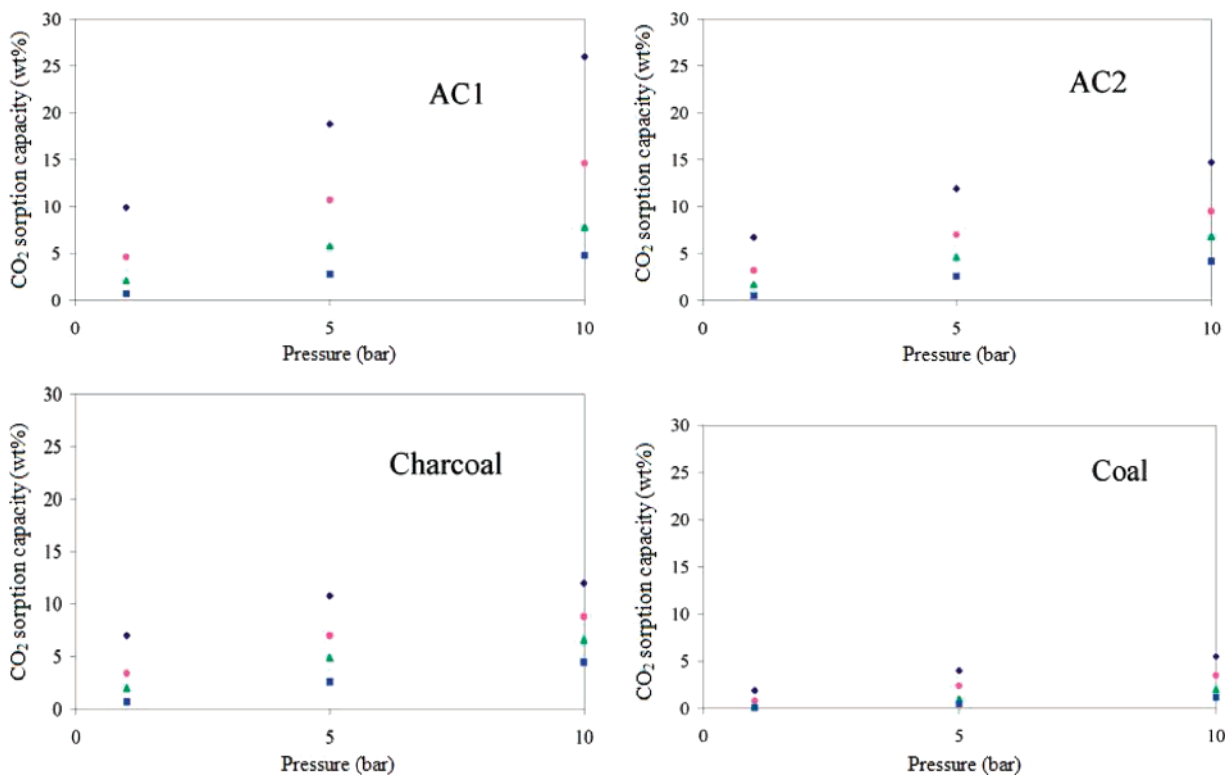

Figure 6. Adsorption isotherms: (◆) 25 °C, (●) 75 °C, (▲) 110 °C, and (■) 130 °C.

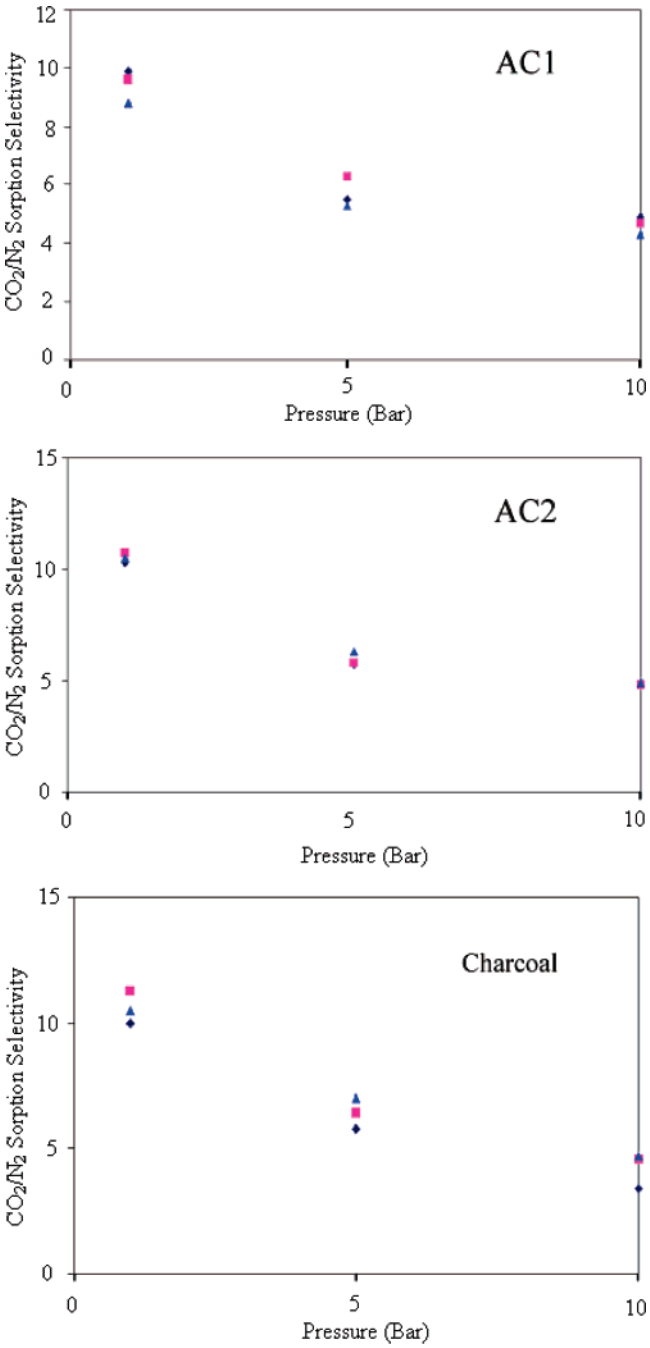

Figure 7. Pressure effect on CO_2/N_2 sorption selectivity at (◆) 25 °C, (■) 75 °C, and (▲) 110 °C for AC1, AC2, and Charcoal.

oxygen selectivity should be similar to the CO_2/nitrogen selectivity. Unless removed upstream of the Carbon Filter, which may be the case for existing power plants, SO_x, NO_x, and mercury were reported to have a high affinity for the activated carbon[48−55] and, hence, are expected to be sorbed with CO_2, as explained in another section of this work.

The sorption temperature of ∼25 °C is assumed not to change much during the sorption cycle, because the CO_2 heat of sorption is on the low side.[31] The sorption time is set at 2 min, the sorbent regeneration is set at 100 °C, using direct-steam[34] desorption for 2 min, based on preliminary breakthrough data taken in our laboratory.[60] These stage times are subject to adjustment to account for specific material and application requirements and constraints. The cooling-air stage time is also set at 2 min, which makes the total cycle time for this preliminary example 6 min. The reason that the heating stage can be so short is that it is accomplished directly, with hot steam flowing through and in a direct contact with the sorbent bed. By contrast, the indirect heating times would be much longer. However, the real air-cooling time can and likely will be longer, and, therefore, is a subject of current and future work. Without any attempt to optimize the vessel size, a cylindrical module is selected based on ref 40 (as explained in the Appendices, for example, 3.5 m in diameter and 2.0 m in length). For the sorption−desorption−cooling cycle described above, this results in 189 alternating vessels, 63 of which are in a sorption mode, 63 are in a desorption mode, and 63 are in an air-cooling mode. This is just a preliminary example, with plenty of room for improvement by optimizing the vessel configuration, which is the subject of another project.

Because the carbonaceous sorbents selected for this work are known to be stable (that is, their capacity does not change much over time[38]), it is assumed that no sorbent replacement is required within 10 years. However, relaxing this assumption, for example, by replacing the sorbent more often, does not impact the cost of recovered CO_2 too much. Among other design assumptions, the sorbent void fraction is estimated to be 0.39,[36,37] and the blower efficiency is set to be 75%.[40]

Among economic approximations, the interest rate is 15%, the electricity cost is \$0.07/kWh, the steam cost is \$7/ton (or \$3.2/MMBTU),[41] and the annual maintenance and repair cost is 7% of the fixed capital investment (FCI).[41] The manpower cost is a relatively minor component of the operating costs, and, hence, it is assumed to be approximately \$1.5 million per year. This and the other first-pass assumptions and approximations should be verified at the next evaluation stage of the most promising process routes.

The first-pass Carbon Filter Process evaluation results are presented below for a vacuum regeneration case and a steam regeneration case, both before heat integration with the power plant and CO_2 compression. The best case will subsequently be revised to account for power-plant integration savings and CO_2 compression costs.

Vacuum Regeneration Comparable to the Benchmark

A simplified process diagram for the Carbon Filter Process with vacuum regeneration is shown in Figure 10. Flue gas at ∼85 °C is cooled to ∼25 °C with water before it is fed with a blower to the sorption unit. After the sorbent is almost saturated with CO_2 for ∼2 min, this unit switches to a 2 min regeneration cycle under vacuum, and then it alternates between the sorption and vacuum stages at ambient temperature. The major cost items are associated with the vacuum pump. The total cost of the recovered CO_2 is approximately \$37/ton, which is comparable to that of the amine benchmark case. (Our more-recent data suggest that this preliminary estimate can be off and, hence, requires future work.)

Thermal Regeneration with Steam or Hot CO_2 is Better than the Benchmark

An isobaric process with direct-steam or hot-CO_2 regeneration is shown in Figure 11. Both sorption and desorption occur at ambient pressure. The feeding section and the sorption cycle are the same as those in the previous case. Instead of vacuum regeneration, however, the saturated sorbent bed switches to a steam heating cycle and then to an air-cooling cycle to bring the bed temperature to near-ambient temperature. As explained in the Cost Example below and in the Appendix, the major cost items are steam and electricity, and the total cost of the

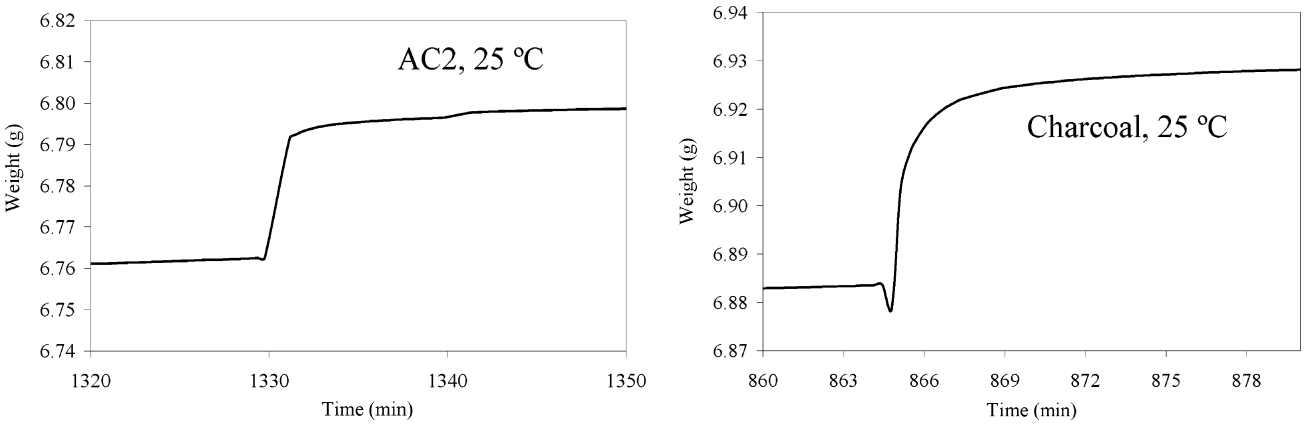

Figure 8. CO_2 sorption equilibration time for AC2 and Charcoal at 1 bar.

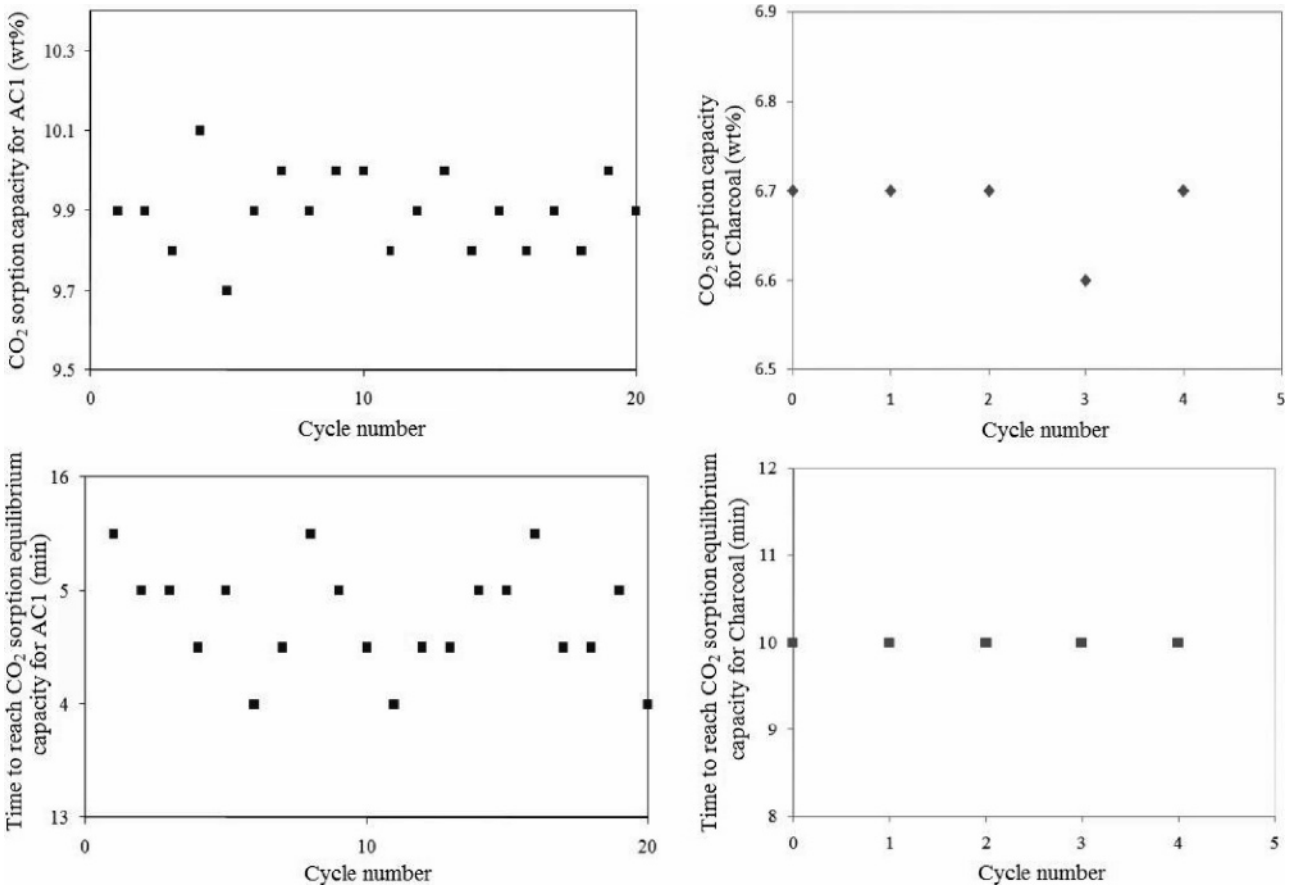

Figure 9. Effect of cycle number on CO_2 sorption capacity (top row) and rate (bottom row) for AC1 (panels in the left column) and Charcoal (panels in the right column) at 1 bar and 25 °C.

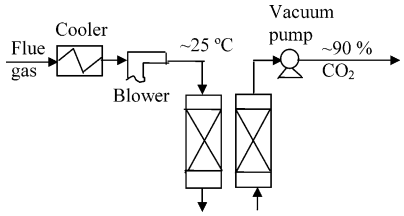

Figure 10. Pressure swing to vacuum.

recovered CO_2 is approximately \$20/ton for AC1, which is much less than that for the amine benchmark.

Hot-CO_2 Regeneration Option

A hot-CO_2 regeneration option has also been studied and evaluated in this work, because it can eliminate the need for steam and, hence, for separating CO_2 from condensed water. However, this option requires more work and, therefore, is not described in detail here.

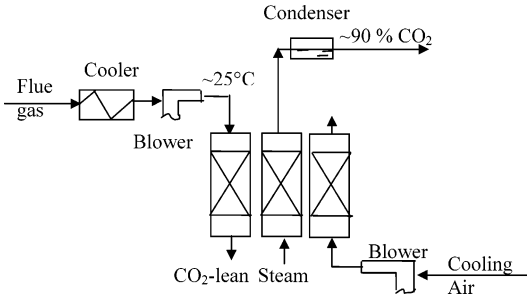

Figure 11. Thermal regeneration with direct steam near ambient pressure.

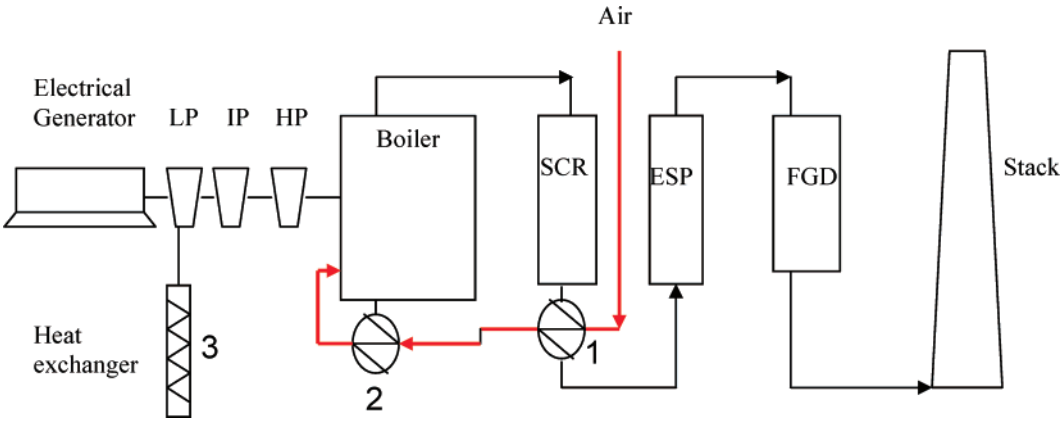

Figure 12. Schematic flow diagram of a power plant. Legend: SCR, selective catalytic reactor; ESP, electrostatic precipitator; and FGD, flue-gas desulfurization.

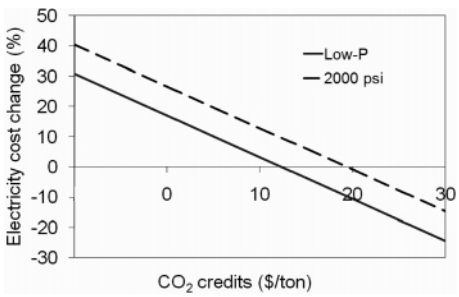

Figure 13. Electricity cost change versus CO_2 credits (tax credits and sales).

Table 4. Low-Pressure CO_2 Cost Examples for AC1 Steam Regeneration

parameter	value
Capital Costs ($\times 10^3$ dollars)	
Heat Exchangers	403
Vessels	3789
Blowers	1367
Miscellaneous	48
Equipment Subtotal	*5607*
Other Direct and Indirect Capital[a]	23215
Fixed Capital Basis (Equipment + Other Direct and Indirect)	*28822*
Working Capital (Sorbent)	2820
Total (Fixed + Working Capital)	*31642*
Annual Operating Costs ($\times 10^3$ dollars/yr)	
Electricity	9343
Steam	42713
Maintenance	2017
Labor	1500
Total	*55574*
Recovered CO_2 Cost[b]	$20/ton

[a] From Appendix B, Table B1. [b] From Appendix B, Table B2.

Cost Example

Table 4 illustrates the capital and annual operating costs for the steam example. The cost of recovered CO_2 is estimated at ambient pressure, prior to compression.

Although a specific sorbent selection will likely be dependent on a more-detailed process optimization, including integration with the power plant, the AC1 sorbent is selected for further evaluation in this work, because it results in the lowest cost of recovered CO_2 ($20/ton, ~60% lower than the benchmark cost).

If a specific sorbent prevents a target CO_2 purity from being obtained, two sorption stages may be needed. Such two-stage cases have been analyzed in this work; however, they are not reported here.

Power Plant Integration Can Reduce CO_2 Costs

Figure 12 illustrates a typical schematic flow diagram of a generic power plant[42,43] with at least three potential sources of thermal energy for the sorbent regeneration:

(1) Effluent of the de-NO_x reactor has a rate of ~488 m^3/s (STP)[27] and a temperature of ~330 °C.[44]

(2) Bottom ash. Coal contains ~5% of ash, of which 80% goes upward as fly ash and 20% goes downward as bottom ash. The bottom ash temperature is ~1000 °C.[44] The Wyodak plant consumes ~6000 tons of coal per day,[27] which translates to ~60 tons of bottom ash per day.

(3) Low-pressure (LP) turbine steam at ~200 °C. For example, assuming that a 500 MW power plant produces LP steam of ~100 000 kJ/s,[45] a 335 MW power plant such as the Wyodak facility will produce ~67 000 kJ/s of LP steam. When multiplied by a heat exchange efficiency (for example, 80%), this energy is equal to $mCp\Delta T$, from which one can calculate the amount of sorbent (m) that can be heated with this steam, for example, for a ΔT value of 75 °C (from 25 °C to 100 °C) and for a given heat capacity Cp (to a crude approximation, 1 kJ/(kg °C)).[57]

Some of these heat sources may not be available if they are tied up in exchanging heat with combustion air. If at least some are available to provide the entire heat for the sorbent regeneration, however unlikely, the cost of recovered CO_2 can be reduced substantially.

Compression and Potential Carbon Credits Will Impact Electricity Costs

The low-pressure CO_2 cost previously estimated must be corrected for compression to make CO_2 ready for transport. The compression cost, from ambient to a pipeline pressure (e.g., 2000 psi) is estimated[47] to add $6−8/ton CO_2 ($7/ton in this work). Therefore, the total cost of compressed, pipeline-ready CO_2 for a power-plant integrated AC1 case should be approximately $27/ton CO_2.

Adding a carbon capture unit to a power plant will affect the electricity cost and, hence, the profitability. For the AC1 case discussed in the previous section, an approximate electricity cost change is plotted, relative to carbon capture credits, in Figure 13. This figure neglects the pipeline and storage fees, if any. The solid line represents the low-pressure CO_2, and the dashed line represents the 2000 psi CO_2.

The electricity cost change (expressed as a percentage) is calculated as follows:

$$\text{change in electricity cost (\%)} = \frac{\text{CO}_2\text{ emission rate} \times \text{recovery} \times \text{purity} \times (\text{capture cost} - \text{credits})}{\text{Power plant capacity} \times 8760 \times \text{electricity selling price}} \times 100$$

where, for the Wyodak example, the CO_2 emission rate is ~3.5 million tons per year, the CO_2 recovery is 90%, the CO_2 purity is 90%, the plant capacity is 335 MW, the number of operation hours per year is 8760, and the electricity selling price is assumed to be \$0.07/kWh.

For a "green" electricity producer who captures CO_2, examples of credits (the last term in the numerator of the expression previously described) are savings due to reduced severance taxes (if any), savings due to reduced or eliminated carbon taxes (if any), and income from selling CO_2, for example, to EOR and ECBMR operators. For example, if the power plant can reduce its coal severance tax from \$6/ton to \$4/ton of coal for reduced CO_2 emissions, it will save approximately \$4/ton of captured and stored CO_2. A future carbon tax may augment these savings, for example, by approximately \$30/ton (unknown at this time). The CO_2 price that EOR operators pay varies widely (e.g., from \$4/ton to \$40/ton).[46] If a "green" power plant can sell CO_2 to an EOR buyer and gain, for example, \$10/ton after the corporate profits tax and other adjustments, its hypothetical total credits will be as high as \$44/ton (comprised of a \$4 severance tax reduction, a \$30 carbon tax reduction, and a \$10 sales credit). This total is unknown, because we do not know at this time how sales may affect tax reductions, if at all. However it goes, Figure 13 allows one to estimate the electricity percent change as a function of credits. For example, credits of \$30/ton can effectively reduce the electricity cost by 10%, credits of \$20/ton can leave the electricity cost unchanged, and zero credits can increase the electricity cost by ~30%; however, these estimates can vary substantially from case to case.

Hypothetically, however unlikely, if our Wyodak case achieves total credits of \$30/ton of CO_2 and maintains the current electricity rates unchanged, its incremental after-tax profits will increase by approximately \$105 000 000/yr. Assuming the same credits for all Wyoming plants in Table 1, if they somewhat unrealistically can capture and sell $\sim 50 \times 10^6$ tons of CO_2 per year, a total incremental gain will be of the order of \$1.5 billion/yr. One must stress that these are hypothetical examples that may not apply to real situations. However, they do illustrate the magnitude of economic opportunities if the carbon capture cost alone can be reduced substantially, relative to the conventional amine technology.

This report documents work in progress. The current projects are aimed at understanding sorption from model flue-gas mixtures and at scale-up data for specific retrofit and grassroots applications. The technology status (patent pending)[61] and licensing information can be obtained from the corresponding author.

Conclusion

A low-pressure Carbon Filter Process proposed to capture carbon dioxide (CO_2) from flue gas is filled with a low-cost carbonaceous sorbent, such as activated carbon, that has a high capacity to retain CO_2 but not nitrogen (N_2), which means a high CO_2/N_2 selectivity. The Carbon Filter Process proposed in this work can recover at least 90% of the flue-gas CO_2 of 90% purity at a fraction of the cost normally associated with the conventional amine absorption process. The Carbon Filter Process can produce low-cost CO_2, because it requires neither expensive materials nor expensive flue gas compression, and it is easy to heat integrate with an existing power plant or a grassroots plant without affecting the cost of the produced electricity too much. An abundant supply of low-cost CO_2 is good news for enhanced oil recovery (EOR) and enhanced coal-bed methane recovery (ECBMR) operators, because it can lead to more oil and gas produced in an environmentally sensitive manner.

Appendix A. Sorption Capacity for CO_2 and N_2

The sorption capacity and selectivity for CO_2 and N_2 are given in Table A1.

Appendix B. Example of the Design Approximations for a Model Sorbent (AC1)

The design approximations used to generate the AC1 steam example in Table 4 can be illustrated as follows.

(1) Select preliminary input data:

Cycle Time	6 min
Flue-Gas Flow Rate	21.5 kmol/s
Pressure	1.1 bar (absolute)
CO_2 Concentration in Flue Gas	12 mol %
Sorbent Density	520 kg/m^3
Sorbent Particle Diameter	0.004 m
Flue-Gas Sorption Capacity	1.9 wt % (mostly CO_2)
CO_2 Recovery per Cycle	90 wt % (811 kmol)
Vessel Diameter	3.5 m
Vessel Length	2 m

Table A1. Sorption Capacity for CO_2 and N_2 at Various Temperatures (T) and Pressures (P)

Charcoal				AC1				AC2				Coal			
P (bar)	Sorption Capacity (wt %) CO_2	N_2	Selectivity	P (bar)	Sorption Capacity (wt %) CO_2	N_2	Selectivity	P (bar)	Sorption Capacity (wt %) CO_2	N_2	Selectivity	P (bar)	Sorption Capacity (wt %) CO_2	N_2	Selectivity
At $T = 25$ °C															
1.0	6.8	0.7	10.0	1.0	9.9	1.0	9.9	1.0	6.7	0.7	10.3	1.0	1.9		
5.0	10.8	1.9	5.8	5.0	18.8	3.4	5.5	5.0	11.9	2.1	5.7	5.0	4.0	0.3	15.4
10.0	12.0	3.5	3.4	10.0	26.0	5.3	4.9	10.0	14.7	3.1	4.8	10.0	5.5	0.6	9.6
At $T = 75$ °C															
1.0	3.4	0.3	11.3	1.0	4.6	0.5	9.6	1.0	3.2	0.3	10.7	1.0	0.8		
5.0	7.0	1.1	6.4	5.0	10.7	1.7	6.3	5.0	7.0	1.2	5.8	5.0	2.4		
10.0	8.8	1.9	4.6	10.0	14.6	3.1	4.7	10.0	9.5	2.0	4.8	10.0	3.5	0.3	10.3
At $T = 110$ °C															
1.0	2.0	0.2	10.5	1.0	2.1	0.2	8.8	1.0	1.7	0.2	10.5	1.0	0.3		
5.0	4.9	0.7	7.0	5.0	5.8	1.1	5.3	5.0	4.6	0.7	6.3	5.0	1.0		
10.0	6.6	1.4	4.7	10.0	7.8	1.8	4.3	10.0	6.8	1.4	4.9	10.0	2.0		
At $T = 130$ °C															
1.0	0.7			1.0	0.7			1.0	0.5			1.0	0.1		
5.0	2.2	0.3	7.3	5.0	2.8	0.6	4.7	5.0	2.6	0.4	6.5	5.0	0.5		
10.0	3.0	0.8	3.8	10.0	4.8	1.1	4.4	10.0	4.2	0.9	4.7	10.0	1.2		

Table B1. Direct, Indirect, Fixed, and Working Capital Costs Estimated for a Purchased Equipment Cost of \$5 607 000[a]

parameter	Fraction of Purchased Equipment[b]	Calculated Values (x 10^3 dollars)
Direct Costs		
Equipment with Delivery	1.1	6168
Installation	0.47	2635
Controls	0.36	2019
Piping	0.68	3813
Electrical	0.11	617
Buildings	0.18	1009
Yard Improvement	0.1	561
Service Facilities	0.7	3925
Total Direct Cost		20747
Indirect Costs		
Engineering	0.33	1850
Construction	0.41	2299
Legal	0.04	224
Contractor Fees	0.22	1234
Contingency	0.44	2467
Total Indirect Cost		8075
Fixed Capital Investment		28822
Working Capital (Sorbent)		2820
Total Capital Cost		31642

[a] Data taken from Table 4. [b] These factors are taken from ref 41, p 251 (see data for "Fluid Processing Plant").

(2) Calculate:

Total Sorbent Mass	1890 tons
Total Number of Vessels	189
Approximate Sorbent Mass per Vessel	10 tons
Flue-Gas Superficial Velocity through Vessel	0.78 m/s

This superficial velocity will be used to estimate the pressure drop in step 3. If the pressure drop is too high, one can reduce the superficial velocity by increasing the vessel diameter (D) (see ref 40, p B-6):

$$D\ (\mathrm{m}) = \sqrt{\frac{4Q}{3.14\nu}}$$

(3) Calculate the total pressure drops across the bed, using the Ergun equation and definitions taken from ref 36 (p 120):

$$\frac{\Delta P\rho}{(\epsilon\nu\rho)^2}\frac{D_p}{\Delta L}\frac{\epsilon^3}{1-\epsilon} = \frac{150}{N_{Re}} + 1.75$$

where ΔP is the pressure drop (in Pascals), ν the superficial velocity (which is set to be 0.78 m/s), ϵ the bed void fraction (which is assumed to be 0.39), ρ the flue gas density (which is assumed to be 1 kg/m^3), D_p the sorbent particle diameter (0.004 m in this case), ΔL the length (in meters), and N_{Re} the Reynolds number. Here, the Reynolds number is defined as

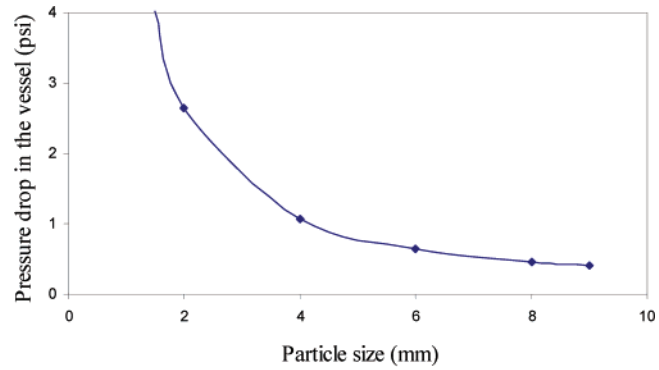

Figure B1. Pressure drop as a function of sorbent particle diameter.

$$N_{Re} = \frac{D_p\epsilon\nu\rho}{(1-\epsilon)\mu}$$

where μ is the flue gas viscosity (which is assumed to be 0.000018 Pa s). For the example in this section, the pressure drop across the sorbent bed is estimated to be of the order of 1 psi, and, hence, the blower capacity is conservatively selected to be 3 psi. If the actual pressure drop is too high, one can, for example, increase the sorbent particle diameter. As illustrated in Figure B1, however, increasing the particle size beyond 4 mm will produce a moderate decrease in the pressure drop.

(4) Determine the type, size, and power of the blowers and vacuum pumps, using information taken from ref 41 (p 527):

$$\mathscr{P} = P_1V_1\left(\frac{k}{k-1}\right)\left[\left(\frac{P_2}{P_1}\right)^{(k-1)/k} - 1\right]$$

where $\mathscr{P}$ is power (in kilowatts), P_1 is the inlet pressure and P_2 is the outlet pressure (both given in units of kPa), V_1 is the flow rate of gas (given in units of m^3/h), k is the ratio of specific heat ($k = C_p/C_v$, where C_p and C_v are the heat capacity at constant pressure and volume, respectively; $k = 1.4$ kJ/(kg K) for air, 1.3 kJ/(kg K) for CO_2). The blower or vacuum pump power efficiency is 75%. Therefore, the power used for economic analysis is equal to $1.25\mathscr{P}$. A high-pressure centrifugal blower is selected. The temperature change for such blowers is negligible. For vacuum pumps, it can be larger. The following equation is used to estimate the temperature increase across the pump (taken from ref 41, p 527):

Table B2. Example Break-Even Point Analysis for the Wyodak Power Plant[a]

year	Investment (dollars, \$)	Operating Cost (× 10^3 dollars)	Product Sales (× 10^3 dollars)	MACRS Depreciation (× 10^3 dollars)	Cash Flow (× 10^3 dollars)	NPV[b] (× 10^3 dollars)
−1	−14 411				−14 411	−16 573
0	−17 231				−17 231	−17 231
1		−55 575	62 949	2882	6701	5827
2		−55 575	62 949	5188	7047	5328
3		−55 575	62 949	4150	6891	4531
4		−55 575	62 949	3320	6766	3869
5		−55 575	62 949	2657	6667	3315
6		−55 575	62 949	2124	6587	2848
7		−55 575	62 949	1888	6552	2463
8		−55 575	62 949	1888	6552	2142
9		−55 575	62 949	1891	6552	1862
10		−55 575	62 949	1888	6552	1619

[a] Recovered CO_2 cost = \$20/ton. [b] Fixed Capital Investment from Table B1 is split into two equal fractions (\$14 411 × 10^3 each during construction), and the Sorbent Cost (\$2820 × 10^3) is added in year 0. [c] Product Sales from recovered CO_2 (3 128 791 tons/yr) sold at a market price of \$20/ton in order to break even. [c] The 10-year Modified Accelerated Cost Recovery System (MACRS) depreciation method is applied to the Fixed Capital Basis.[41] [b] Net present value of the facility for an interest rate of 15%; in year n, NPV = (Cash Flow) × $(1 + 0.15)^n$.[41]

$$\frac{T_2}{T_1} = \left(\frac{P_2}{P_1}\right)^{(k-1)/k}$$

(5) Use ASPEN Plus to determine the type and size of heat exchangers. The temperature difference between "hot out" and "cold in" is assumed to be 10 °C. Multiple-pipe heat exchangers are selected.

(6) Determine the steam amount and the cost of sorbent regeneration. The energy required for sorbent regeneration is defined as

$$E = mC_p\Delta T$$

where m is the mass of sorbent (in kilograms), C_p the specific heat of sorbent (given in units of kJ/(kg K)), and ΔT the temperature difference (in Celsius degrees). The low-level steam enthalpy is set to be ~2100 kJ/kg (see ref 36, p 858). The steam price is assumed to be $7/ton or $3.2/MMBTU (using data taken from ref 41, p 266). Because the sorption bed can be insulated, 90% of the steam energy is assumed to be utilized to heat the sorbent.

(7) Determine the capital cost and operating cost. The cost of compressors and blowers is taken from ref 41, pp 531−535, as is the cost of the heat exchangers (pp 681−692). After the equipment cost is calculated, the fixed capital investment and total capital costs are estimated and reported in Table B1, with additional data from ref 41 (p 251). With the total capital and operating cost being available, a break-even point is calculated to obtain the price of recovered CO_2. The cash flow and the net present value (NPV) are calculated as shown in Table B2 for an interest rate of 15%. The total NPV is set equal to zero in the "Goal Seek" function by changing the cell that contains the CO_2 price.

Acknowledgment

This work was partially funded by Wyoming's Enhanced Oil Recovery Institute and a discretionary fund of one of the authors (M.R.). Mr. Zachary Tyrrell contributed the amine absorption data and economic evaluation approaches. Mr. Ryan Hart contributed the zeolite adsorption data. Dr. Hertanto Adidharma and Mr. Zachary Tyrrell helped one of the authors (X.H.) with flow-through-porous-sorbent calculations and sizing the sorbent vessels. Prof. Owen Phillips reviewed the economic approximations and data. Mr. Ian Andrews and Mr. Nick Rahn (PacifiCorp Energy), Mr. Robert Matius and Mr. Eldon Lindt (Xcel Energy), Mr. George Farthing (Babcock & Wilcox Company), and anonymous journal reviewers contributed helpful comments that enhanced this work.

Literature Cited

(1) Herzog, H. E.; Drake, E. A. CO_2 capture, reuse, and storage technologies for mitigating global climate change. Technical Report No. DOE/DE-AF22-96PC01257, U.S. Department of Energy, Pittsburgh, PA, 1999.

(2) Mimura, T.; Nojo, T.; Iijima, M.; Yoshiyama, T.; Tanaka, H. Recent developments on flue gas CO_2 recovery technology. *Greenhouse Gas Control Technol., Proc. Int. Conf., 6th* **2003**, (2), 1057.

(3) White, C. M.; Strazisar, B. R.; Granite, E. J.; Hoffman, J. S.; Pennline, H. W. Separation and capture of CO_2 from large stationary sources and sequestration in geological formations—coalbeds and deep saline aquifers. *Air Waste Manage. Assoc.* **2003**, *53*, 645.

(4) Aaron, D.; Tsouris, C. Separation of CO_2 from flue gas. *Sep. Sci. Technol.* **2005**, *40*, 321.

(5) Rogers, R. D., Seddon, K. R., Eds. *Ionic Liquids: Industrial Applications for Green Chemistry*; ACS Symposium Series 818; American Chemical Society: Washington, DC, 2006.

(6) Tang, J.; Sun, W.; Tang, H.; Radosz, M.; Shen, Y. Enhanced CO_2 absorption of poly(ionic liquid)s. *Macromolecules* **2005**, *38*, 2037.

(7) Tang, J.; Tang, H.; Sun, W.; Plancher, H.; Radosz, M.; Shen, Y. Poly(ionic liquid)s: a new material with enhanced and fast CO_2 absorption. *Chem. Commun.* **2005**, *26*, 3325.

(8) Tang, J.; Tang, H.; Sun, W.; Radosz, M.; Shen, Y. Low-pressure CO_2 sorption in ammonium-based poly(ionic liquid)s. *Polymer* **2005**, *46*, 12460.

(9) Cong, H.; Zhang, J.; Radosz, M.; Shen, Y. Carbon nanotube nanocomposite membranes of brominated poly(2,6-diphenyl-1,4-phenylene oxide) for gas separation. *J. Membr. Sci.* **2007**, *294*, 178.

(10) Cong, H.; Hu, X.; Radosz, M.; Shen, Y. Brominated poly(2,6-diphenyl-1,4-phenylene oxide) and its SiO_2 nanocomposite membranes for gas separation. *Ind. Eng. Chem. Res.* **2007**, *46*, 2567.

(11) Hu, X.; Cong, H.; Shen, Y.; Radosz, M. Nanocomposite Membranes for CO_2 Separations: Silica/Brominated PPO [Poly(phenylene oxide)]. *Ind. Eng. Chem. Res.* **2007**, *46*, 1547.

(12) Jee, J.-S.; Kim, J.-T.; Suh, J.-K.; Lee, J.-M.; Lee, C.-H. Adsorption equilibria of CO_2 on zeolite 13X and zeolite X/activated carbon composite. *J. Chem. Eng. Data* **2002**, *47*, 1237.

(13) Siriwardane, R. V.; Shen, M.-S.; Fisher, E. P.; Poston, J. A. Adsorption of CO_2 on molecular sieves and activated carbon. *Energy Fuels* **2001**, *15*, 279.

(14) Zou, Y.; Rodrigues, A. E. Adsorbent materials for carbon dioxide. *Adsorpt. Sci. Technol.* **2001**, *53*, 645.

(15) Vyas, S. N.; Patwardhan, S. R.; Vijayalakshmi, S.; Ganesh, K. S. Adsorption of gases on carbon molecular sieves. *J. Colloid Interface Sci.* **1994**, *168*, 275.

(16) Mazumder, S.; van Hemert, P.; Busch, A.; Wolf, K.-H. A. A.; Tejera-Cuesta, P. Flue gas and pure CO_2 sorption properties of coal: A comparative study. *Int. J. Coal Geol.* **2006**, *67*, 267.

(17) Mastalerz, M.; Gluskoter, H.; Rupp, J. Carbon dioxide and methane sorption in high volatile bituminous coals from Indiana, USA. *Int. J. Coal Geol.* **2004**, *60*, 43.

(18) Medek, J. Possibility of micropore analysis of coal and Charcoal from the carbon dioxide isotherm. *Fuel* **1977**, *56*, 131.

(19) Nodzenski, A. Sorption and desorption of gases (CH_4, CO_2) on hard coal and active carbon at elevated pressures. *Fuel* **1998**, *77*, 1243.

(20) Belmabkhout, Y.; Weireld, G. D.; Frere, M. High pressure adsorption isotherms of N_2, CH_4, O_2, and Ar on different carbonaceous adsorbents. *J. Chem. Eng. Data* **2004**, *49*, 1379.

(21) Youssef, A. M.; Ghazy, T. M.; El-Nabarawy, T. Moisture sorption by modified activated carbon. *Carbon* **1982**, *20*, 113.

(22) Chiche, P.; Marsh, H.; Pregermani, S. Adsorption of carbon dioxide, methanol and water vapour on Charcoals—determination of micropore volume. *Fuel* **1967**, *46*, 341.

(23) Na, B.-K.; Koo, K.-K.; Eum, H.-M.; Lee, H.; Song, H. K. CO_2 recovery from flue gas by PSA process using activated carbon. *Korean J. Chem. Eng.* **2001**, *18*, 220.

(24) Na, B.-K.; Lee, H.; Koo, K.-K.; Song, H. K. Effect of rinse and recycle methods on the pressure swing adsorption process to recover CO_2 from power plant flue gas using activated carbon. *Ind. Eng. Chem. Res.* **2002**, *41*, 5498.

(25) Ishibashi, M.; Ota, H.; Akutsu, N.; Umeda, S.; Tajika, M.; Izumi, J.; Yasutake, A.; Kabata, T.; Kageyama, Y. Technology for removing carbon dioxide from power plant flue gas by the physical adsorption method. *Energy Convers. Manage.* **1996**, *37*, 929.

(26) Ishibashi, M.; Otake, K.; Kanamori, S.; Yasutake, A. Study on CO_2 removal technology from flue gas of thermal power plant by physical adsorption method. *Greenhouse Gas Control Technol., Proc. Int. Conf., 4th* **1999**, 95.

(27) Hart, R.; Tyrrell, Z.; Wickramathilaka, S.; Binder, M.; Gangle, M.; Madrid, A. Carbon dioxide separation. University of Wyoming Senior Design Project, University of Wyoming, Laramie, WY, 2006.

(28) Rochelle, G.; Bishnoi, S.; Chi, S.; Dang, H.; Santos, J. Research needs for CO_2 capture from flue gas by aqueous absorption/stripping. Final report on DOE P.O. No. DE-AF26−99FT01029, January 17, 2001.

(29) Sartori, G.; Leder, F. (Exxon Research & Engineering Co.). Process for removing carbon dioxide containing acidic gases from gaseous mixtures using a basic salt activated with a hindered amine. U.S. Patent 4,112,050, Septemnber 5, 1978.

(30) Hoffman, J. S.; Pennline, H. W. Capture of carbon dioxide with a physical adsorbent. Unpublished DOE report, U.S. Department of Energy, 2007.

(31) Chue, K. T.; Kim, J. N.; Yoo, Y. J.; Cho, S. H. Comparison of activated carbon and zeolite 13X for CO_2 recovery from flue gas by pressure swing adsorption. *Ind. Eng. Chem. Res.* **1995**, *34*, 591.

(32) Blasig, A.; Tang, J.; Hu, X.; Shen, Y.; Radosz, M. Magnetic suspension balance study of carbon dioxide solubility in ammonium-based

polymerized ionic liquids: poly(*p*-vinylbenzyltrimethyl ammonium tetrafluoroborate) and poly([2-(methacryloyloxy)ethyl] trimethyl ammonium tetrafluoroborate). *Fluid Phase Equilib.* **2007**, *256*, 75.

(33) Dastgheib, S. A.; Karanfil, T. Adsorption of oxygen by heat-treated granular and fibrous activated carbon. *J. Colloid Interface Sci.* **2004**, *274*, 1.

(34) Shigemoto, N.; Yanagihara, T. Material balance and energy consumption for CO_2 recovery from moist flue gas employing K_2CO_3-on-Activated carbon and its evaluation for practical adaptation. *Energy Fuels* **2006**, *20*, 721.

(35) Berlier, K.; Frere, M. Adsorption of CO_2 on activated carbon: simultaneous determination of integral heat and isotherm of adsorption. *J. Chem. Eng. Data* **1996**, *41*, 1144.

(36) Geankoplis, C. J. *Transport Processes and Unit Operation*, 3rd Edition; PTR Prentice Hall: Englewood Cliffs, NJ, 1993.

(37) Rousseau, R. W. *Handbook of Separation Process Technology*; Wiley: New York, 1987; p 654.

(38) Kong, Y.; Cha, C. Y. NO_x abatement with carbon adsorbents and microwave energy. *Energy Fuels* **1995**, *9*, 971.

(39) Narayanan, S. P.; Venkatarathnam, G. Performance of a counterflow heat exchanger with heat loss through the wall at the cold end. *Cryogenics* **1999**, *39*, 43.

(40) U.S. Army Corps of Engineers. *Adsorption Design Guide*; University Press of the Pacific: Honolulu, HI, 2001; p B-7. (ISBN: 1-4102-1988-7.)

(41) Peters, M. S.; Timmerhaus, K. D.; West, R. E. *Plant Design and Economics for Chemical Engineers*, 5th Edition; McGraw−Hill: New York, 2003.

(42) Metz, B.; Davidson, O.; Coninck, H. D.; Loos, M.; Meyer. *Carbon Dioxide Capture and Storage*; Cambridge University Press: Oxford, U.K., 2005. (Published for the Intergovernmental Panel on Climate Change.)

(43) Central Electricity Generating Board. *Modern Power Station Practice*, Vol. 1: Planning & Layout; Vol. 2: Boilers, Fuel & Ash handling plant; Vol. 3: Turbines & Auxiliary Equipment; Pergamon Press: Oxford, 1971. (ISBN: 0-08-016436-6.)

(44) Felder, R. M.; Rousseau, R. W. *Elementary Principles of Chemical Processes*, 3rd Edition; Wiley: New York, 2000.

(45) Rosen, M. A.; Dincer, I. Thermoeconomic analysis of power plants: an application to a coal fired electrical generating station. *Energy Convers. Manage.* **2003**, *44*, 2743.

(46) Boyles, J. M.; Veld, K. V. Preliminary CO_2 demand analysis for the Powder River Basin. Presented to the Wyoming Oil and Gas Conservation Commission, March 14, 2006.

(47) Wong, S. CO_2 compression and transportation to storage reservoir, Module 4. Building capacity for CO_2 capture and storage in the APEC region: A training manual for policy makers and practitioners. The Delphi Group: Ottawa, ON, Canada, 2005. (APEC Reference No. 205-RE-01.3.)

(48) Teng, H.; Suuberg, E. M.; Calo, J. M. Studies on the reduction of nitric oxide by carbon: The NO−carbon gasification reaction. *Energy Fuels* **1992**, *6*, 398.

(49) Lai, C. S.; Peters, W. A.; Longwell, J. P. Reduction of NO by Charcoal over CaO. *Energy Fuels* **1988**, *2*, 586.

(50) Tsuji, K.; Shiraishi, I. Combined desulfurization, denitrification and reduction of air toxics using activated Charcoal. *Fuel* **1997**, *76*, 549.

(51) Tang, Q.; Zhang, Z.; Zhu, W.; Cao, Z. SO_2 and NO selective adsorption properties of coal-based activated carbon. *Fuel* **2005**, *84*, 461.

(52) Lee, S. H.; Rhim, Y. J.; Cho, S. P.; Baek, J. I. Carbon-based novel sorbent for removing gas-phase mercury. *Fuel* **2006**, *85*, 219.

(53) Scala, F. Modeling mercury capture in coal-fired power plant flue gas. *Ind. Eng. Chem. Res.* **2004**, *43*, 2575.

(54) Hassett, D. J.; Eylands, K. E. Mercury capture on coal combustion fly ash. *Fuel* **1999**, *78*, 243.

(55) Chuang, C. L.; Fan, M.; Xu, M.; Brown, R. C.; Sung, S.; Saha, B.; Huang, C. P. Adsorption of arsenic(V) by activated carbon prepared from oat hulls. *Chemosphere* **2005**, *61*, 478.

(56) Dunne, J. A.; Rao, M.; Sircar, S.; Gorte, R. J.; Myers, A. L. Calorimetric heats of adsorption and adsorption isotherms. 2. O_2, N_2, Ar, CO_2, CH_4, C_2H_6, and SF_6 on NaX, H-ZSM-5, and Na-ZSM-5 zeolites. *Langmuir* **1996**, *12*, 5896.

(57) Fluscheim, C. H.; Wright, A.; Newbery, P. G.; Humpage, W. D. *Industrial Microwave Heating*; Peter Peregrinus, Ltd.: London, U.K., 1983; pp 84−85.

(58) Lin, H.; Merkel, T.; Baker R. The membrane solution to global warming. Presented at the Sixth Annual Conference on Carbon Capture and Sequestration, Pittsburgh, PA, 2007.

(59) Levine, D. G.; Schlosberg, R. H.; Silbernagel, B. G. Understanding the chemistry and physics of coal structure (A Review). *Proc. Natl. Acad. Sci., U.S.A.* **1982**, *79*, 3365.

(60) Krutkramelis, K.; Hu, X.; Shen, Y.; Radosz, M. Equilibrium sorption capacity and sorbate concentration for CO_2/N_2 mixtures on carbonaceous sorbents. *Ind. Eng. Chem. Res.* in review.

(61) Radosz, M.; Shen, Y. (University of Wyoming). Low-Pressure Carbon Filter Process to Capture Carbon Dioxide and Other Air Pollutants, Patent Pending, 2006.

Received for review June 10, 2007
Revised manuscript received October 20, 2007
Accepted October 23, 2007

IE0707974